STOP

EST. 1856 McDonald

DuraMAC™ Water Pressure Booster System

Quick Start Guide

1 Pipe Purge Plug

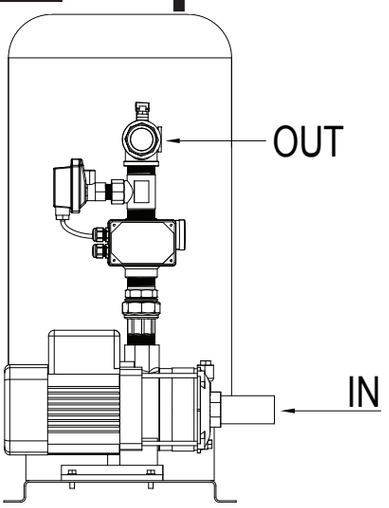

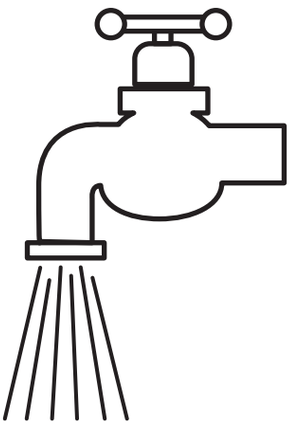

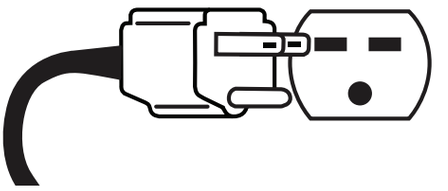

2 Look Set Push

SET DIAL 10-15 PSI BELOW MAX BOOSTED PRESSURE

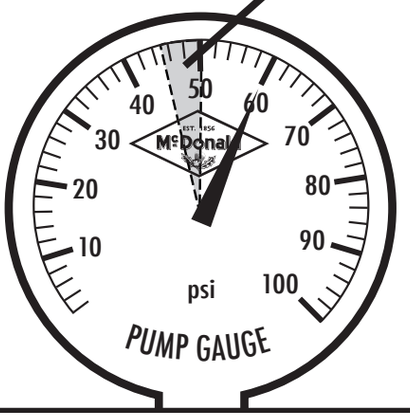

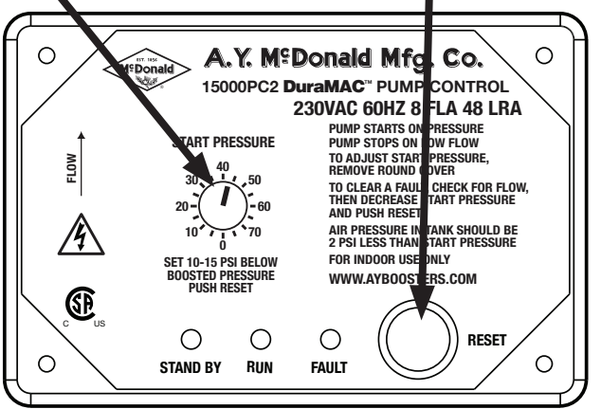

3 Air Pressure

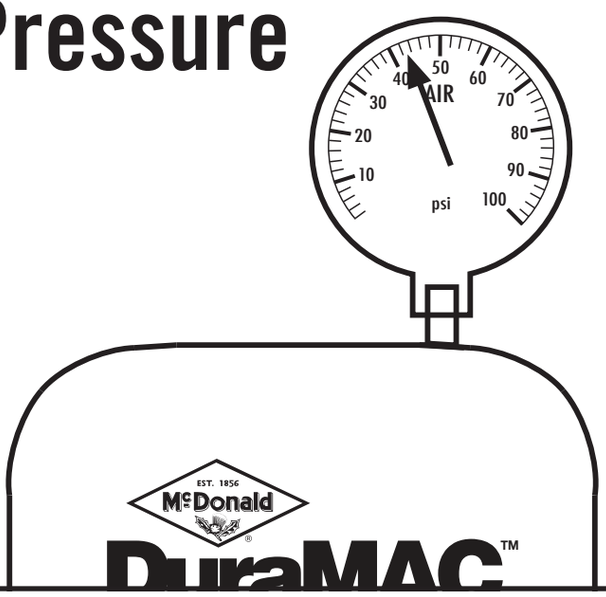

2 PSI LESS THAN START PRESSURE DIAL SETTING

BE SURE WATER PRESSURE IS AT 0 WHEN SETTING TANK

3210-490 3/22

WARNING: It is unlawful in **CALIFORNIA & VERMONT (effective 1/1/2010); MARYLAND (effective 1/1/2012); LOUISIANA (effective 1/1/2013) and the UNITED STATES OF AMERICA (effective 1/4/2014)** to use any product in the installation or repair of any public water system or any plumbing in a facility or system that provides water for human consumption if the wetted surface area of the product has a weighted average lead content greater than 0.25%. This prohibition does not extend to service saddles used in California, Louisiana or under USA Public Law 111-380.

800-292-2737 | sales@aymcdonald.com | aymcdonald.com